Pietro Fiorentini

Delivering Residential Gas Pressure Regulation with Reduced Methane Emissions and Enhanced Safety

A New Approach to Residential Service Regulator Design



EXECUTIVE SUMMARY

Natural gas utilities face increasing pressure to reduce methane emissions while maintaining system safety, code compliance, reliability, and affordability. Traditional residential service regulators often rely on large-capacity relief valves or slam-shut devices to provide overpressure protection, each presenting operational and economic tradeoffs.

This paper examines the evolving regulatory and operational challenges facing gas utilities and introduces a new dual-stage residential regulator architecture designed to address these concerns. By combining balanced regulation technology with integrated token relief valves, the NeoR™ regulator provides continuous gas service, low methane emissions, enhanced overpressure protection, and compliance with current ANSI B109.4, NFPA 54, and IFGC requirements.

The result is a compact, cost-effective residential regulator that supports utility safety objectives while reducing environmental impact.

The Industry Challenge

Gas utilities today operate in an environment shaped by three critical priorities:

- Safety and overpressure protection
- Methane emissions reduction
- Cost-effective infrastructure deployment

As methane emissions receive greater scrutiny from regulators, environmental organizations, and the public, utilities are seeking technologies that reduce vented gas while maintaining safe and reliable service.

At the same time, utilities must comply with evolving standards and regulations including:

- ANSI B109.4
- NFPA 54
- IFGC
- 49 CFR §192

Traditional residential regulator designs often require tradeoffs between safety, emissions performance, installation requirements, and overall cost.

SAFETY	EMISSIONS	ECONOMICS
Overpressure protection	Methane reduction	Cost-effective deployment

LIMITATIONS OF TRADITIONAL APPROACHES

Historically, utilities have relied on one of two approaches:

Slam-Shut Regulators

Slam-shut devices provide positive overpressure protection by completely interrupting gas flow during an overpressure event.

Advantages:

- High level of protection
- Well-established technology

Limitations:

- Service interruption to the customer
- Additional installation complexity
- Increased maintenance requirements
- Higher overall system cost

Conventional Relief Regulators

Traditional relief-style regulators maintain gas flow but often vent larger volumes of gas during upset conditions.

Advantages:

- Continuous gas service
- Simpler operation

Limitations:

- Increased methane emissions
- Potential environmental concerns
- Reduced efficiency during abnormal operating conditions

Utilities increasingly seek a solution that preserves service continuity while minimizing emissions and maintaining regulatory compliance.

A NEW SOLUTION: DUAL-STAGE REGULATION

To better understand utility needs, Pietro Fiorentini conducted extensive Voice of Customer (VOC) research with gas utility operators, engineers, and industry stakeholders. The most common request was clear:

A residential regulator that provides:

- Compliance with current industry standards
- Reduced methane emissions
- Continuous gas service
- Elimination of unnecessary complexity
- Competitive installed cost

The result is the patent-pending NeoR™ residential service regulator.

NeoR™ Technology Overview

NeoR incorporates a dual-stage balanced regulator architecture derived from Pietro Fiorentini's proven FE regulator platform. Unlike conventional single-stage residential regulators, NeoR divides pressure reduction into two stages.

Stage One: Balanced pressure regulation

The balanced first stage regulates varying inlet pressures and limits downstream pressure to approximately 1.5 psig.

Stage Two: Precise delivery pressure

The second stage further reduces pressure to the desired delivery pressure, typically 7 inches water column.

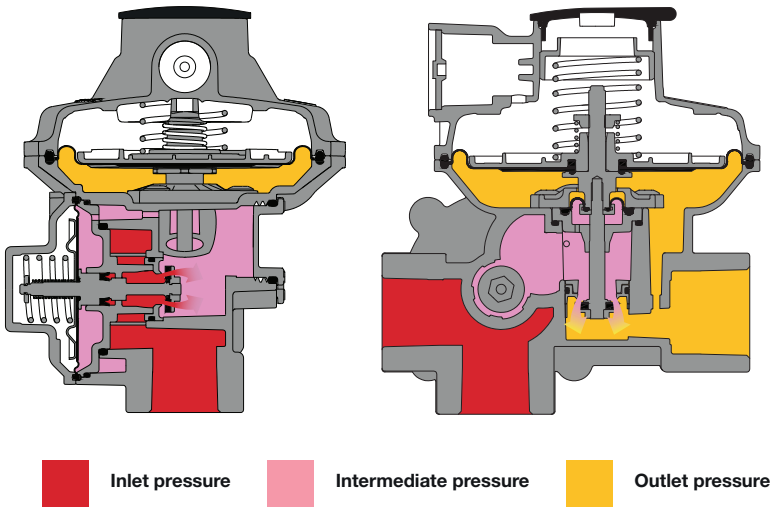

This architecture provides:

- Improved outlet pressure accuracy
- Stable performance across varying inlet pressures
- Enhanced pressure control
- Simplified inventory management

A key benefit is the use of a common orifice design across multiple inlet pressure and flow conditions, reducing the need for multiple regulator configurations.

INTEGRATED OVERPRESSURE PROTECTION

The NeoR utilizes a double Integrated Relief Valve (IRV) configuration.

The first-stage IRV vents a maximum of 2.5 SCFH.

The second-stage IRV vents a maximum of 14 SCFH.

These token relief valves release only a small volume of gas during abnormal operating conditions, providing a detectable indication of failure while minimizing methane emissions.

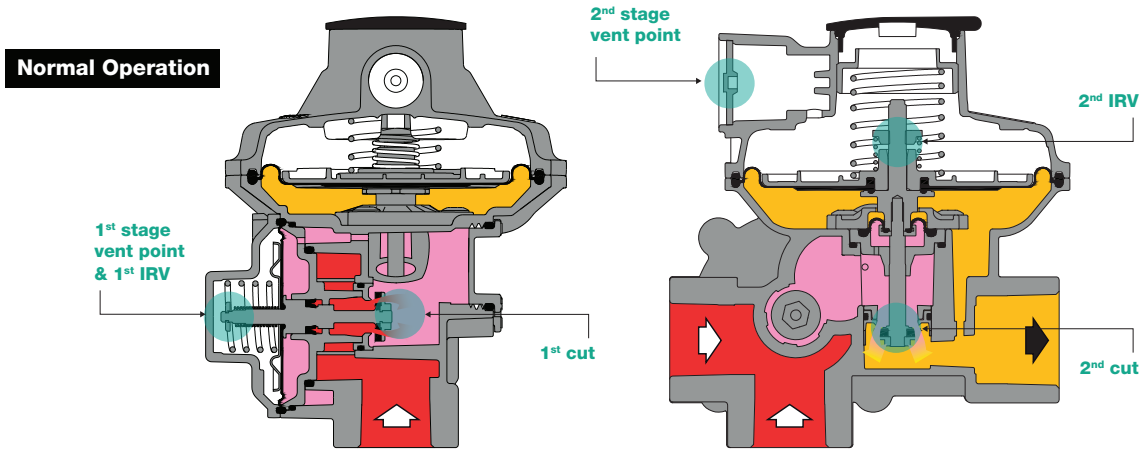

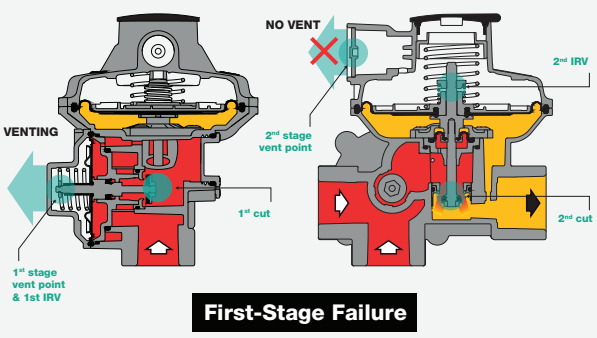

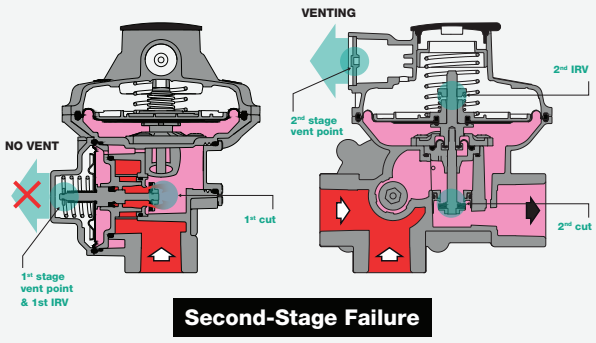

Catastrophic First-Stage Failure Protection

In the unlikely event of a first-stage failure, NeoR limits delivery pressure to approximately 1.5 psig.

This performance meets the NFPA 54 pressure limitation of 2 psig with additional margin.

Unlike a slam-shut system that interrupts service, NeoR continues supplying gas while signaling the abnormal condition through controlled token venting.

Key Venting Limits

- First-stage IRV: maximum 2.5 SCFH
- Second-stage IRV: maximum 14 SCFH
- First-stage pressure limit: approximately 1.5 psig

EMISSIONS PERFORMANCE COMPARISON

Typical Overpressure Protection Methods

Protection Method	Service Continuity	Methane Emissions	Complexity
Slam Shut	**No**	**None**	**High**
Traditional Relief Regulator	**Yes**	**Moderate to Low**	**Low**
NeoR Dual-Stage IRV Design	**Yes**	**Low**	**Moderate**

Actual venting performance depends on operating conditions and regulator set points.

Performance Specifications

Design	Dual-Stage Balanced Regulator
Standard Capacities	630 SCFH and 1,000 SCFH
Maximum Capacity	Up to 1,400 SCFH at 2 psig
First-Stage Limit	1.5 psig
First-Stage IRV	Max 2.5 SCFH
Second-Stage IRV	Max 14 SCFH
Biomethane Compatible	Yes
Hydrogen Blend Compatible	Up to 20% (standard)
Optional Thermal Valve	Available
Installation	Standard 3-Foot Clearance Applications

Additional Safety Features

NeoR includes several integrated features designed to improve reliability and long-term performance:

- Built-in inlet strainer to prevent debris intrusion
- Optional thermal shutoff valve
- Thermal valve rated to stop gas flow for up to 90 minutes at 1,472°F
- Biomethane (RNG) compatibility
- Hydrogen blending compatibility up to 20%, with higher blends available upon request

BUSINESS VALUE FOR UTILITIES

The NeoR provides utilities with a practical path toward balancing safety, emissions reduction, and operational efficiency.



Nylon filter

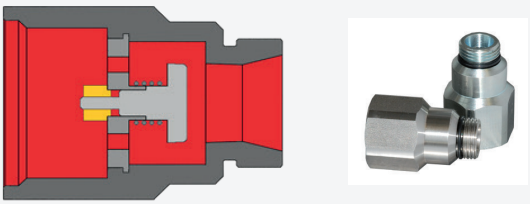

Thermal safety valve

What This Means for Utilities

Reduced Methane Emissions

Token relief technology minimizes vented gas during abnormal operating conditions.

Improved System Reliability

Dual-stage pressure control delivers stable outlet pressure across varying inlet conditions.

Enhanced Customer Experience

Continuous gas service avoids nuisance outages associated with slam-shut operation.

Lower Lifecycle Costs

Standardized components and simplified inventory requirements reduce operational complexity.

Future-Ready Infrastructure

Supports RNG and hydrogen blending initiatives.

CONCLUSION

Utilities face increasing pressure to reduce methane emissions while maintaining the safety, reliability, and affordability of natural gas delivery systems.

The NeoR™ residential regulator addresses these challenges through an innovative dual-stage architecture that combines precise pressure control, integrated overpressure protection, reduced emissions, and continuous gas service. By rethinking traditional residential regulator design, NeoR provides utilities with a practical solution for meeting today's operational requirements while preparing for tomorrow's energy landscape.

To learn more about the NeoR™ residential gas pressure regulator and how its innovative design can support your utility’s safety, performance, and emissions reduction goals, contact your Pietro Fiorentini representative or visit **www.fiorentini-usa.com**



About Pietro Fiorentini

For more than 80 years, Pietro Fiorentini has developed innovative technologies for natural gas regulation, measurement, and control. Through a commitment to engineering excellence and customer collaboration, Pietro Fiorentini delivers solutions that improve safety, efficiency, reliability, and environmental performance across gas distribution networks worldwide.